FIBERCRETE®
TRENCH SYSTEM

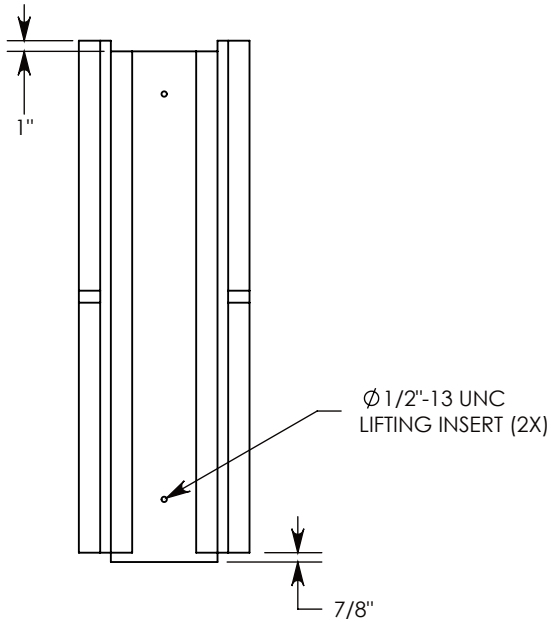

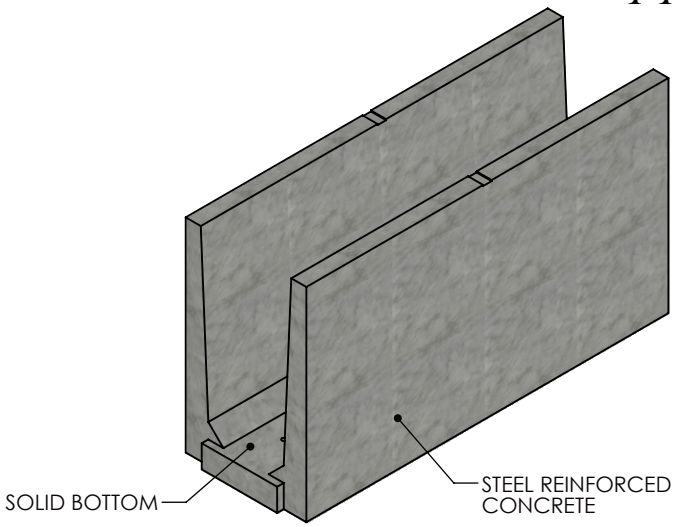

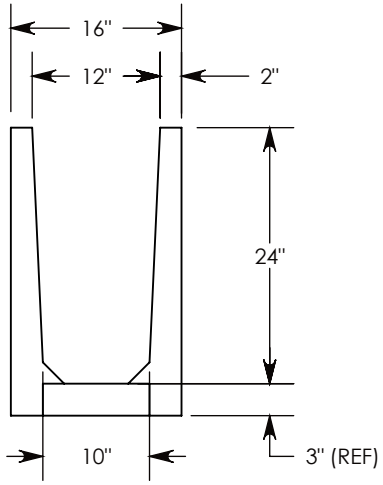

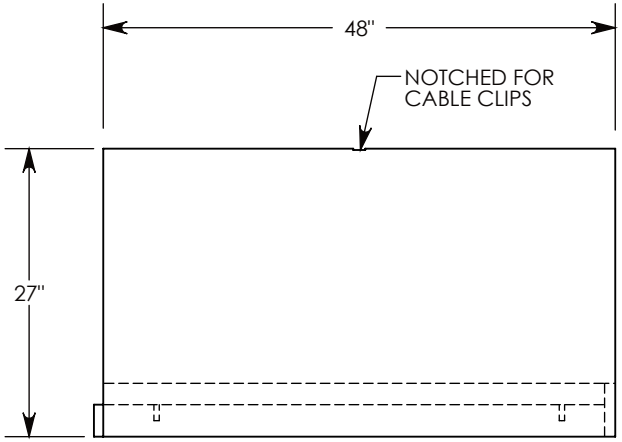

NOTE: FOR NON-STANDARD LENGTHS THE CHANNEL WILL BE SOLID BOTTOM AND DESIGNATED WITH ITS CORRESPONDING LENGTH MEASUREMENT. IE: 801024PTSB 32"

PEDESTRIAN RATED - 200 LB. PER SQ. FOOT

DRAWN BY: ROBIN FLINT		CONCAST 1010 NORTH STAR DRIVE P.O. BOX 69 ZUMBROTA, MN 55992-0069	**DESCRIPTION:** PEDESTRIAN CHANNEL - SOLID BOTTOM
DATE: 3/4/2016	**REVISION LEVEL:** 0		DIMENSIONS ARE IN INCHES TOLERANCES: FRACTIONAL: ± 1/8" ANGULAR: ± 2°
WEIGHT: 717 LBS.	**MATERIAL:** NOTED		CONTACT INFORMATION: EMAIL: INFO@CONCASTINC.COM PHONE: (507) 732-4095 FAX: (507) 732-4094
			SHEET 1 OF 3
			PART NUMBER: 801024PTSB