VAULT PACKAGE BILL OF MATERIALS (BOM)

PART NUMBER	DESCRIPTION	QTY
FCV-120-114-76-SS	VAULT WITH STAINLESS STEEL HARDWARE	1
FCV-120-114-FX	FIXED STEEL COVER WITH STD. DECK PLATE	1
FCV-120-114-SA	SPRING-ASSISTED STEEL COVER WITH STD. DECK PLATE	1

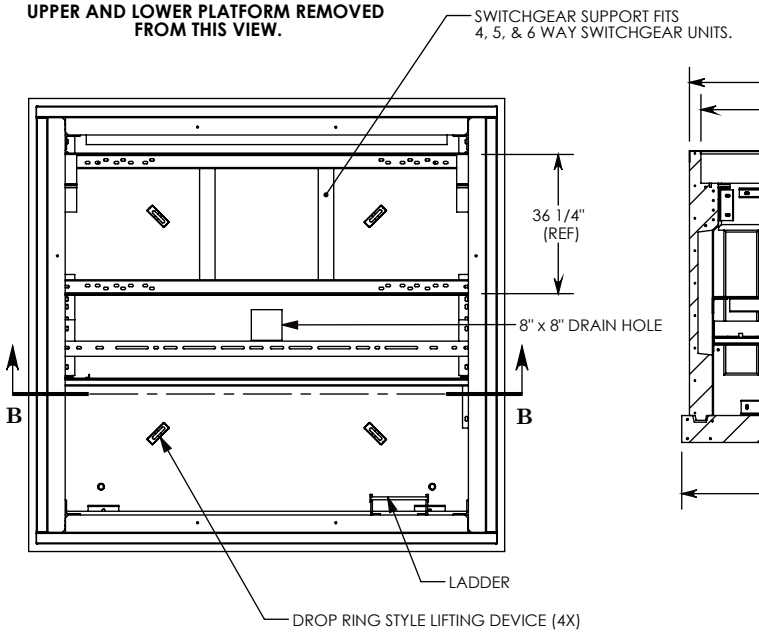

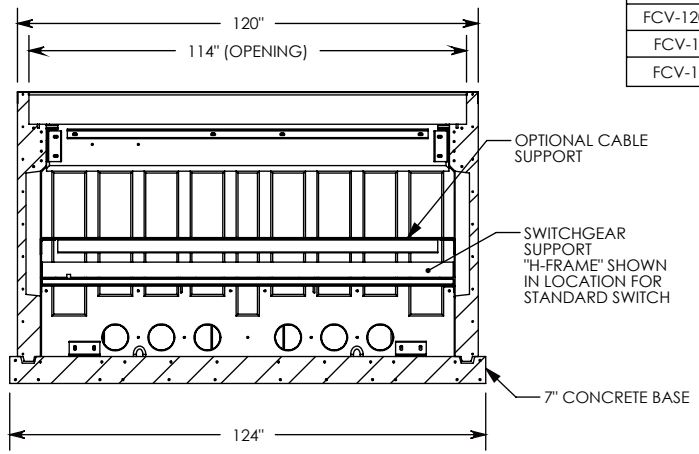

SECTION B-B

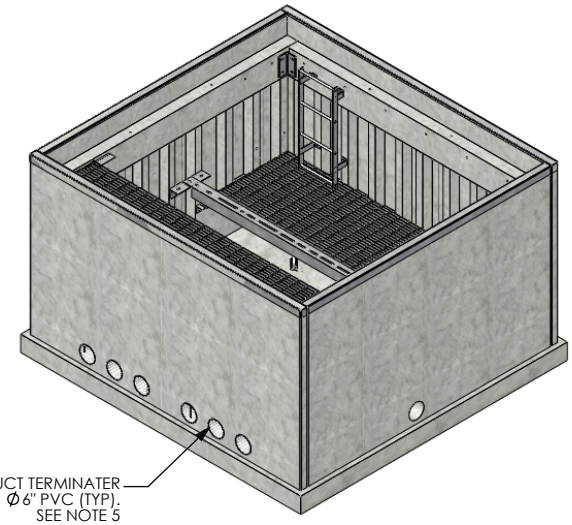

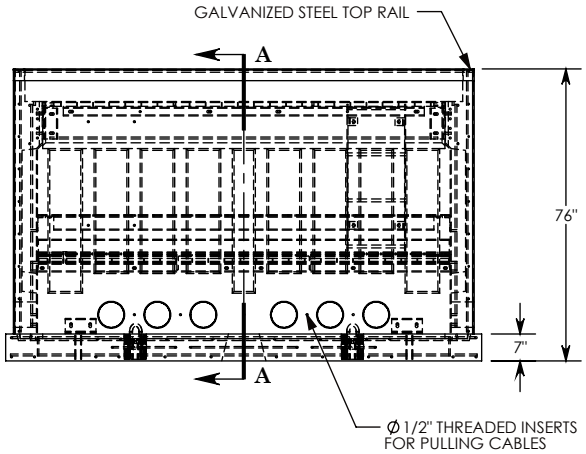

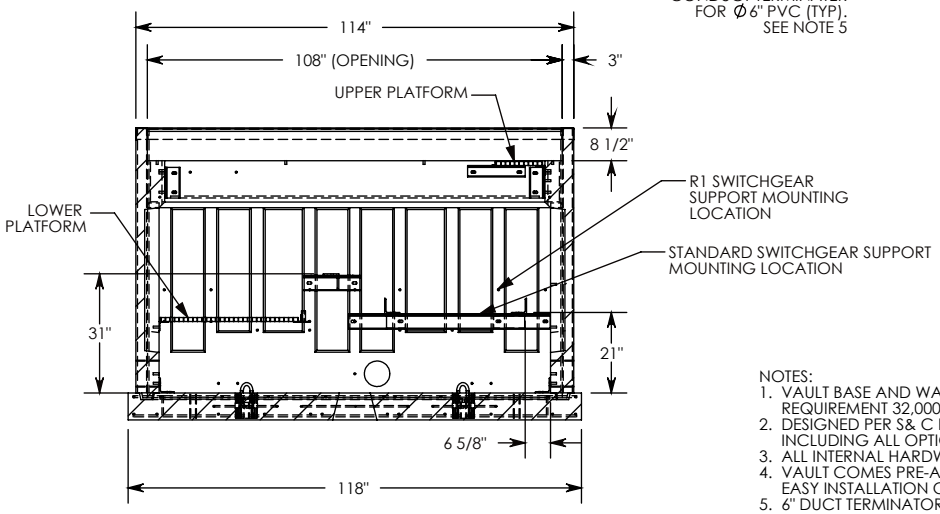

SECTION A-A

NOTES:
1. VAULT BASE AND WALLS MEET AASHTO H-20 HEAVY EQUIPMENT REQUIREMENT 32,000 LB. AXLE LOAD.
2. DESIGNED PER S& C PULL BOX SPECIFICATIONS DATA SHEET 681-51. INCLUDING ALL OPTIONAL INTERIOR STEEL HARDWARE.
3. ALL INTERNAL HARDWARE IS STAINLESS STEEL.
4. VAULT COMES PRE-ASSEMBLED WITH COVERS REMOVED FOR EASY INSTALLATION OF YOUR SWITCHGEAR.
5. 6" DUCT TERMINATORS CAST INTO THE WALLS ARE TYPICAL, BUT ANY SPECIAL SIZE HOLES OR KNOCKOUTS CAN BE ORDERED.
6. UNIT MUST BE LIFTED VIA THE FOUR CAST-IN, DROP RING LIFTING DEVICES SHOWN.
7. LISTED WEIGHT IS THE ASSEMBLED VAULT WITHOUT THE COVER.

DRAWN BY: ROBIN FLINT		CONCAST 1010 NORTH STAR DRIVE P.O. BOX 69 ZUMBROTA, MN 55992-0069	DESCRIPTION: PRECAST CONCRETE VAULT
DATE: 6/21/2012	REVISION LEVEL: 0		DIMENSIONS ARE IN INCHES TOLERANCES: FRACTIONAL: ± 1/8" ANGULAR: ± 2° / CONTACT INFORMATION: EMAIL: INFO@CONCASTINC.COM PHONE: (507) 732-4095 FAX: (507) 732-4094 / SHEET 1 OF --
WEIGHT: 21354 LBS.	MATERIAL: NOTED		PART NUMBER: FCV-120-114-76-SS1

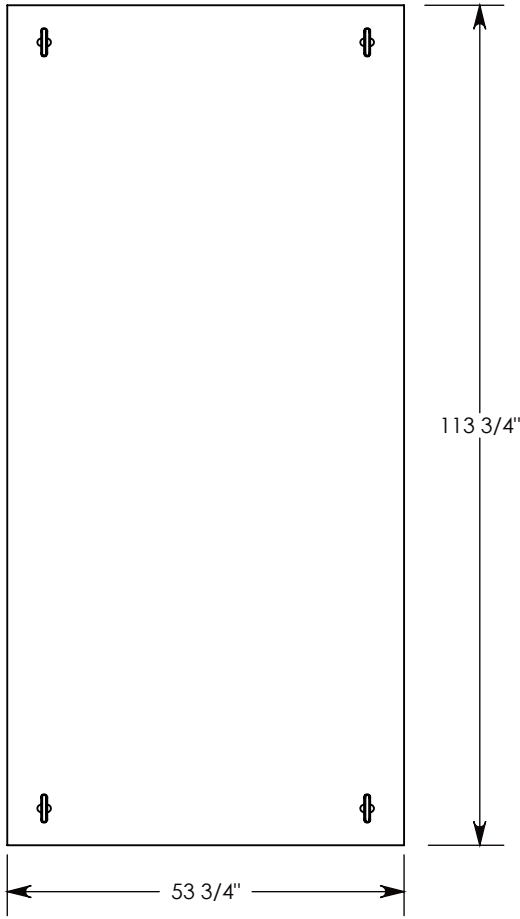

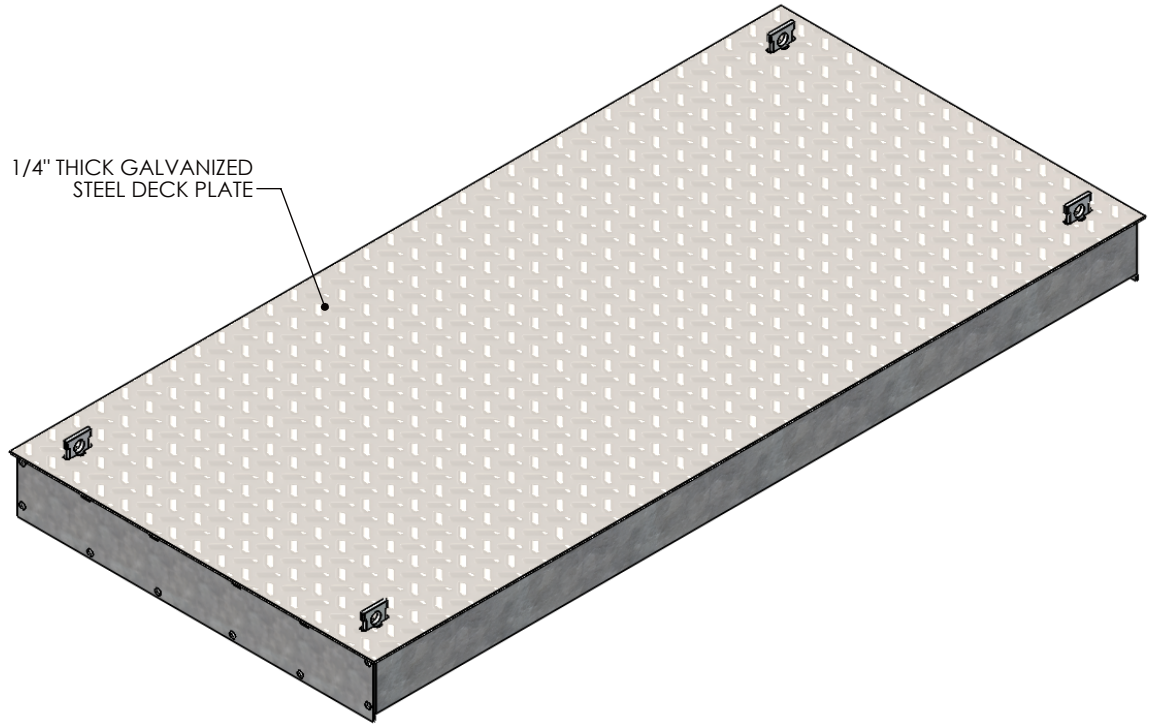

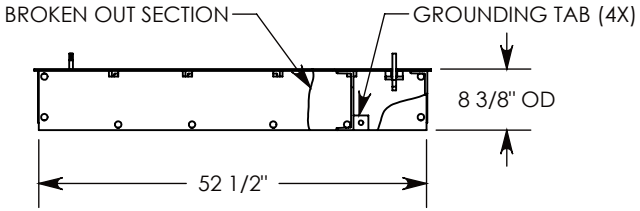

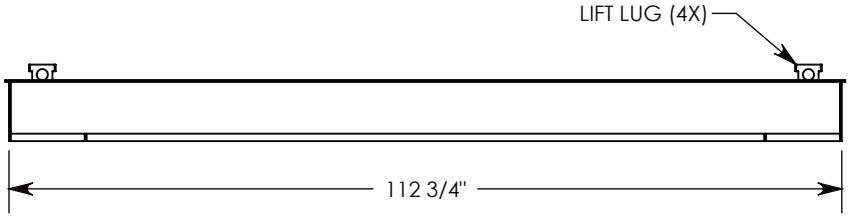

NOTE 1: COVER FITS A 120-114 VAULT (OPENINGSIZE = 114" X108")

H20 RATED - 32,000 LB. PER AXLE LOAD.

DRAWN BY: ROBIN FLINT		CONCAST 1010 NORTH STAR DRIVE P.O. BOX 69 ZUMBROTA, MN 55992-0069	**DESCRIPTION:** VAULT COVER - FIXED
DATE: 10/3/2013	**REVISION LEVEL:** 0		DIMENSIONS ARE IN INCHES TOLERANCES: FRACTIONAL: ± 1/8" ANGULAR: ± 2°
WEIGHT: 1297 LBS.	**MATERIAL:** WELDED GALV. STEEL		CONTACT INFORMATION: EMAIL: INFO@CONCASTINC.COM PHONE: (507) 732-4095 FAX: (507) 732-4094
			SHEET 1 OF 2
			PART NUMBER: FCV-120-114-FX

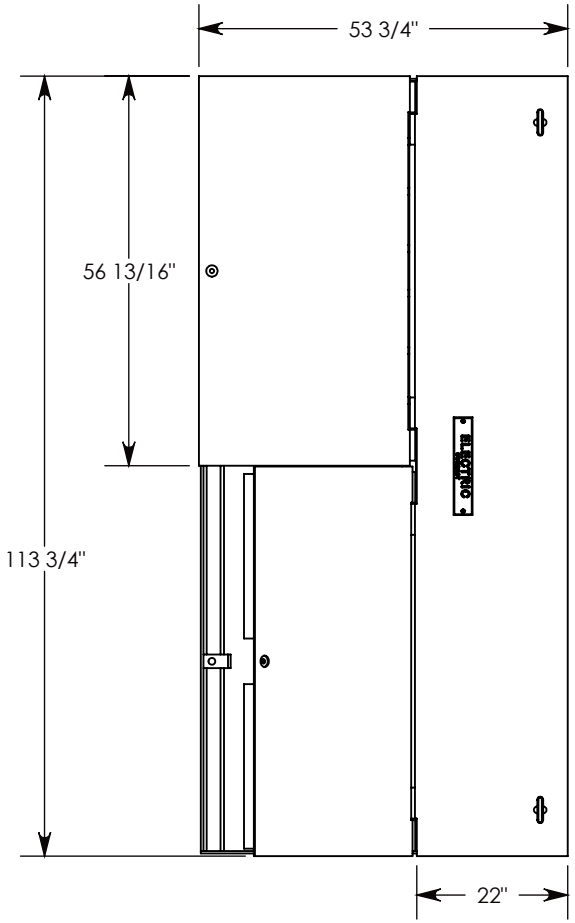

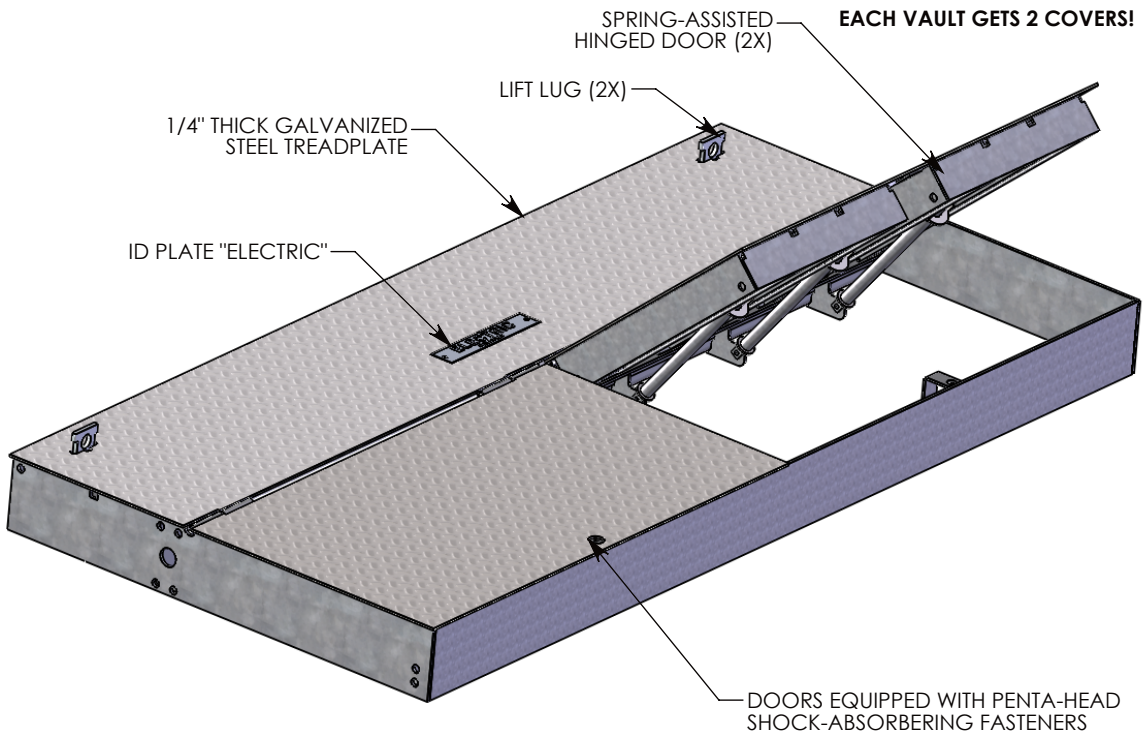

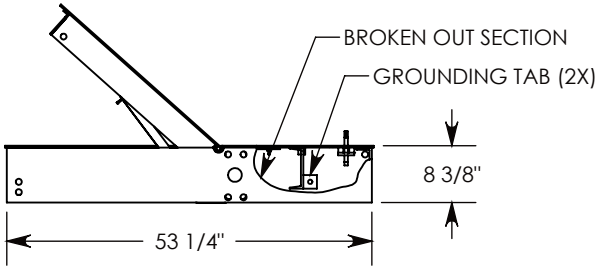

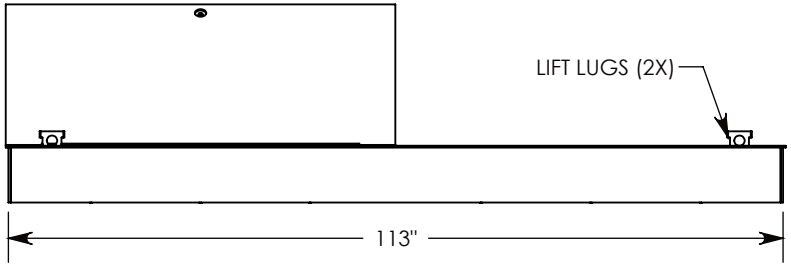

NOTE 1: COVER FITS A 120-114 VAULT (OPENINGSIZE = 114" X108")

H20 RATED - 32,000 LB. PER AXLE LOAD.

DRAWN BY: ROBIN FLINT		CONCAST 1010 NORTH STAR DRIVE P.O. BOX 69 ZUMBROTA, MN 55992-0069	**DESCRIPTION:** VAULT COVER SPRING-ASSISTED
DATE: 10/3/2013	**REVISION LEVEL:** 0		DIMENSIONS ARE IN INCHES TOLERANCES: FRACTIONAL: ± 1/8" ANGULAR: ± 2°
WEIGHT: 1530 LBS.	**MATERIAL:** WELDED GALV. STEEL		CONTACT INFORMATION: EMAIL: INFO@CONCASTINC.COM PHONE: (507) 732-4095 FAX: (507) 732-4094
			SHEET 1 OF 2
			PART NUMBER: FCV-120-114-SA