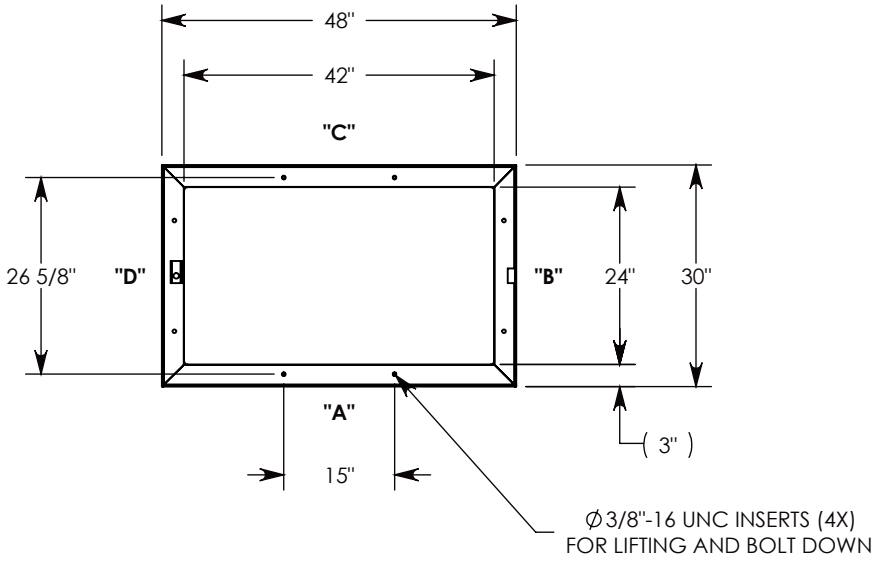

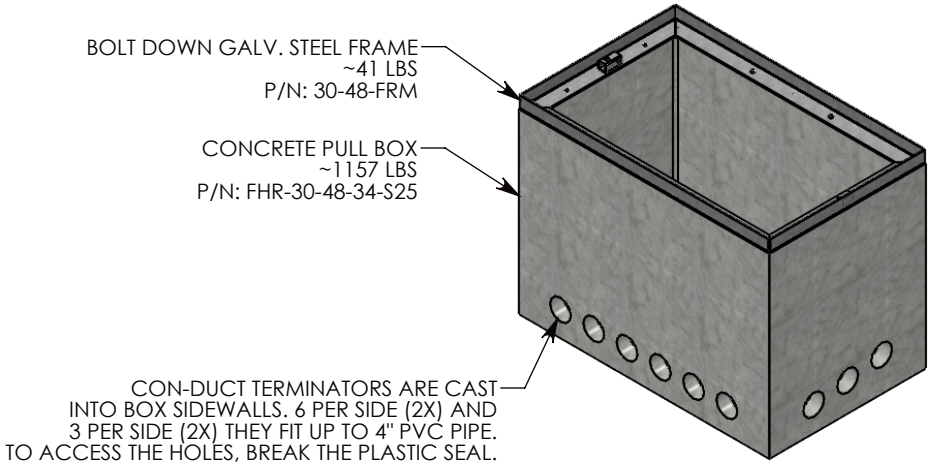

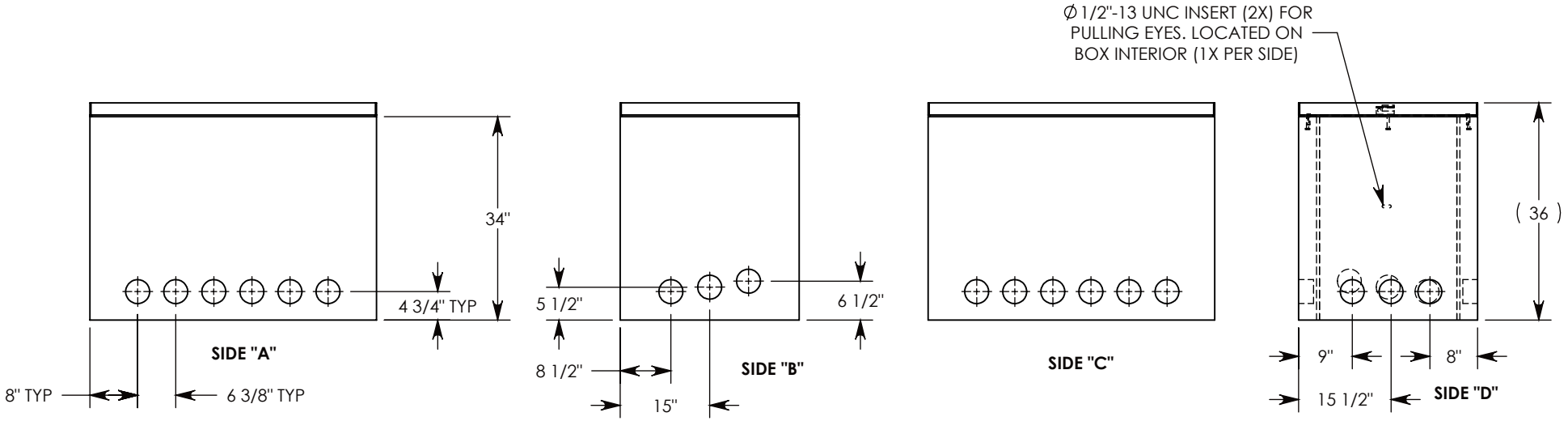

DRAWN BY: MALACHI MLINAR	
DATE: 7/2/2019	**REVISION LEVEL:** 0
WEIGHT: 1198 LBS.	**MATERIAL:** NOTED

CONCAST
1010 NORTH STAR DRIVE
P.O. BOX 69
ZUMBROTA, MN 55992-0069

DESCRIPTION:
HEAVY TRAFFIC HANDHOLE

DIMENSIONS ARE IN INCHES TOLERANCES: FRACTIONAL: ± 1/8" ANGULAR: ± 2°	CONTACT INFORMATION: EMAIL: INFO@CONCASTINC.COM PHONE: (507) 732-4095 FAX: (507) 732-4094	SHEET 1 OF 1

PART NUMBER: FHR-30-48-36-S25