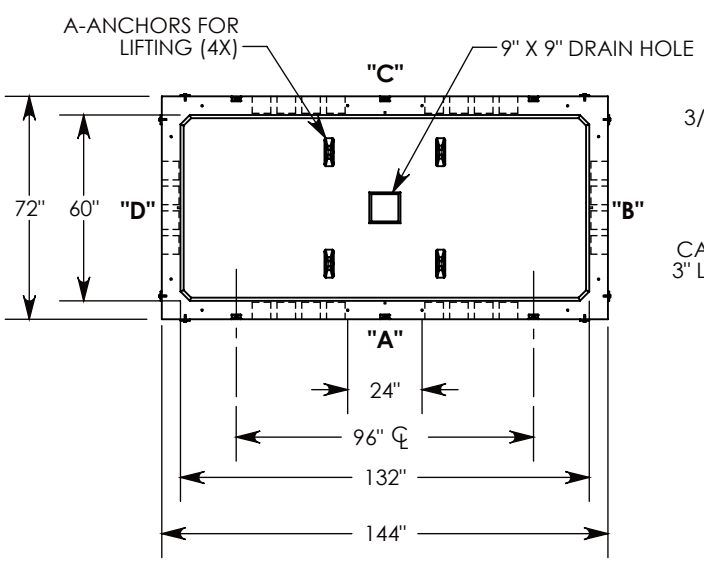

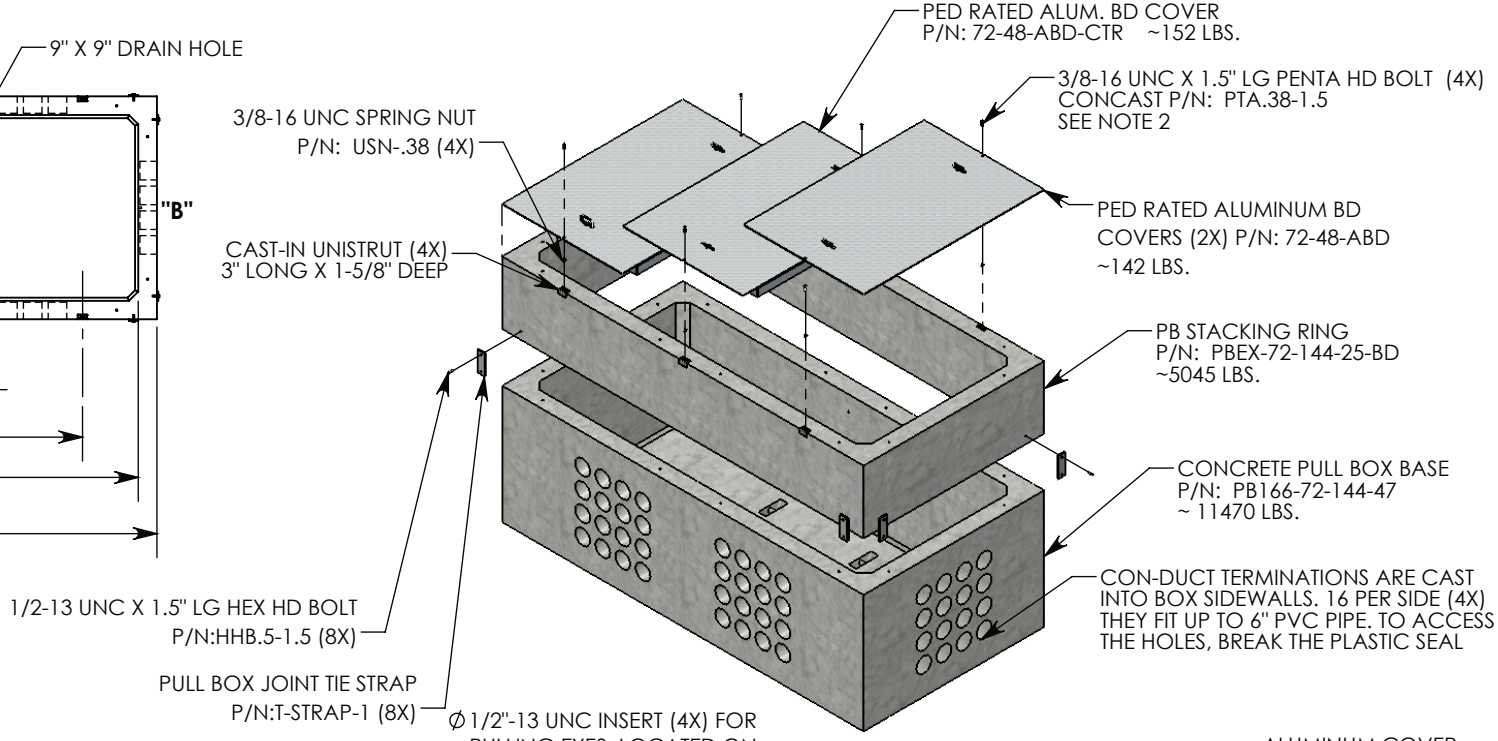

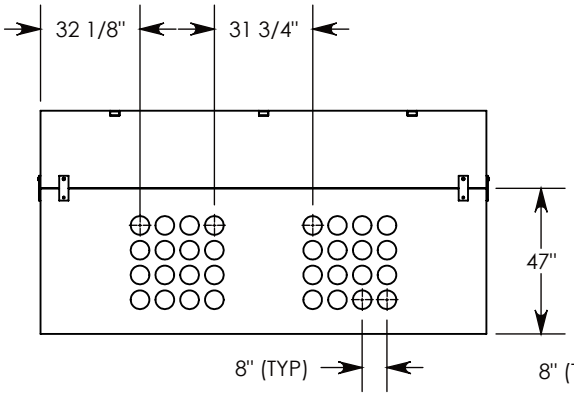

SIDE "A" (HLR)

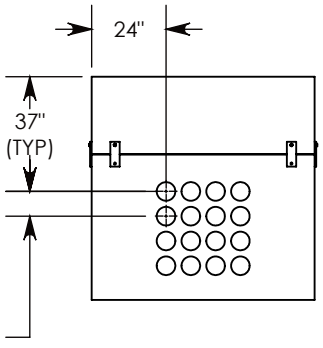

SIDE "B" (HLR)

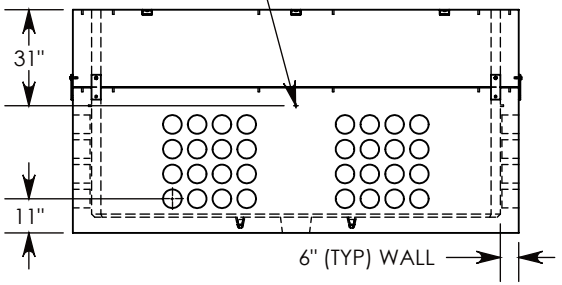

SIDE "C"

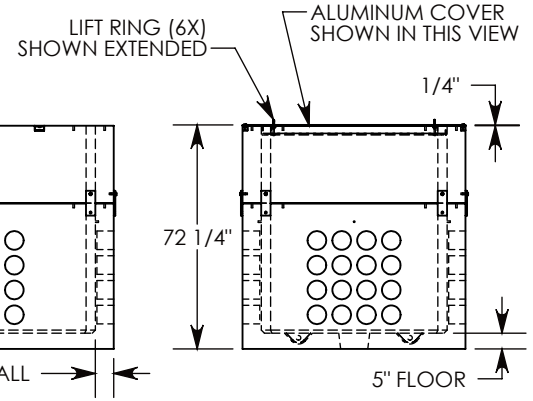

SIDE "D"

NOTE 1: FOR ADDED SECURITY, REPLACE PENTAHEAD BOLTS WITH SURELOCK BOLTS & ORDER UNIT UNDER P/N: PB166-72-144-72-ABDSL

PEDESTRIAN RATED - 200 LB. PER SQ. FOOT

DRAWN BY: JESSE GUTTING		**DESCRIPTION:** CONCRETE PULL BOX W/ALUM. BD COVERS
DATE: 11/2/2016	**REVISION LEVEL:** 0	DIMENSIONS ARE IN INCHES TOLERANCES: FRACTIONAL: ± 1/8" ANGULAR: ± 2°
WEIGHT: 16982 LBS. W/COVERS	**MATERIAL:** NOTED	**PART NUMBER:** PB166-72-144-72-ABD

CONCAST
1010 NORTH STAR DRIVE
P.O. BOX 69
ZUMBROTA, MN 55992-0069

CONTACT INFORMATION:
EMAIL: INFO@CONCASTINC.COM
PHONE: (507) 732-4095
FAX: (507) 732-4094