REV. A - SIC - 7/17/2019 - UPDATED COVER NOTE AND SECURITY BOLT NOTE; CHANGED COVER BOLTS FROM PENTA HEAD TO STANDARD HEX

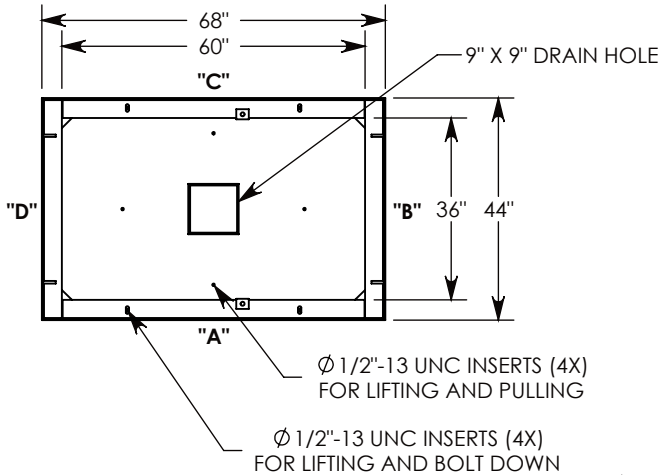


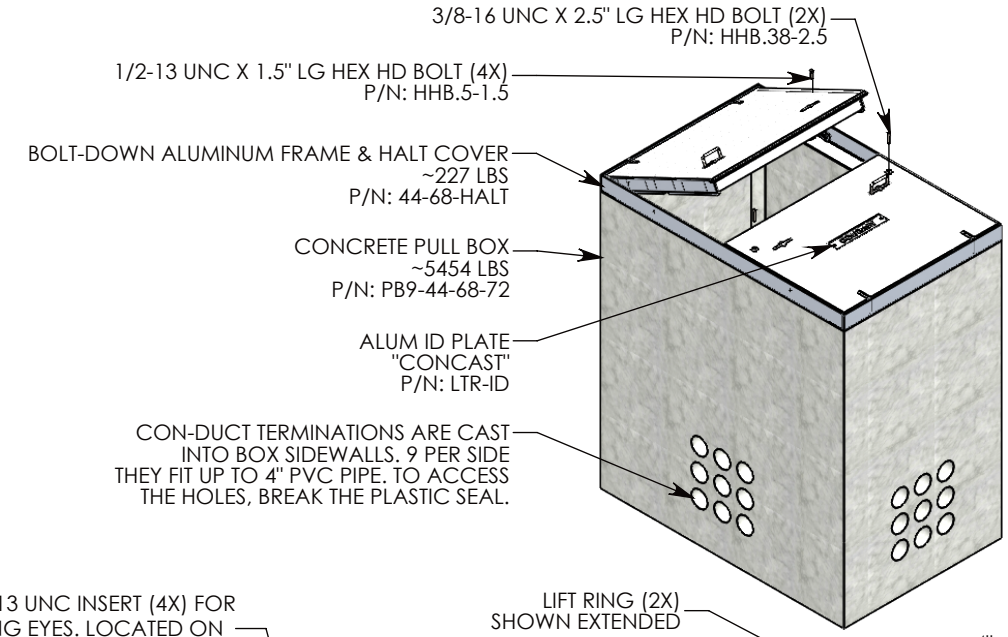


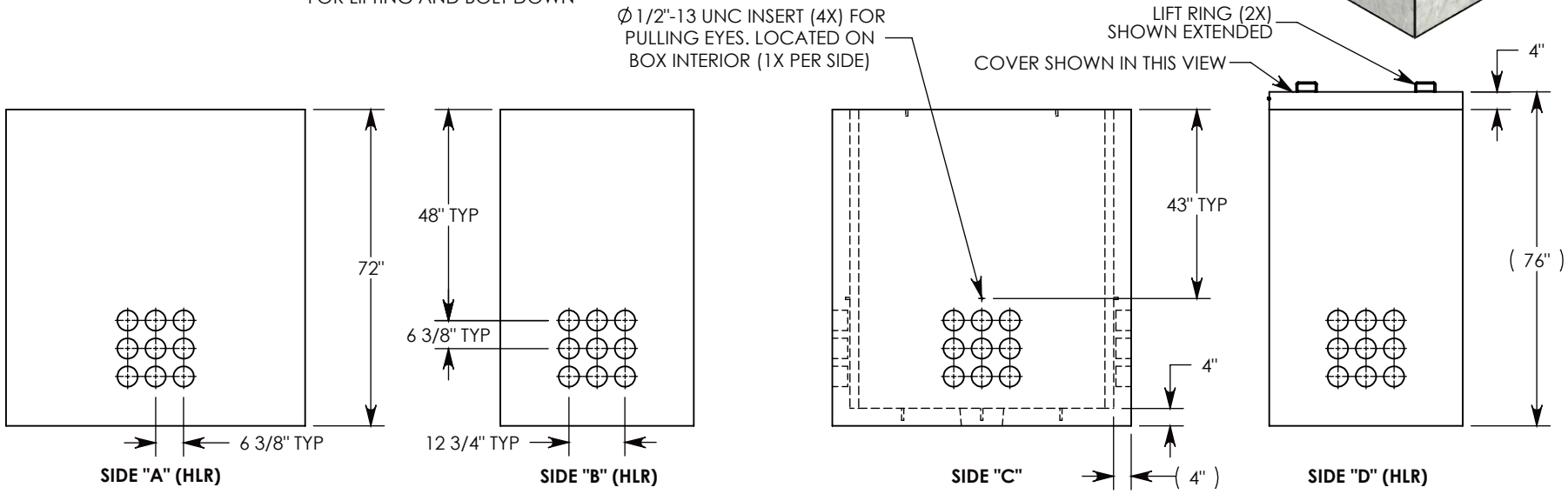


**NOTE 1:** FOR ADDED SECURITY, PENTA HEAD (P/N: PTA.38-2.5) OR SURELOCK BOLTS (P/N: SL.38-2.5) CAN BE ADDED

**NOTE 2:** FOR PVC SIZES SMALLER THAN 4", USE CONCAST RC41 (REDUCING COUPLER).

AASHTO H-10 RATED – 16,000 LB. SINGLE AXLE LOAD

| | | | |
|---|---|---|---|
| **DRAWN BY:** SAMUEL CALLAHAN | | CONCAST<br>1010 NORTH STAR DRIVE<br>P.O. BOX 69<br>ZUMBROTA, MN 55992-0069 | **DESCRIPTION:** CONCRETE PULL BOX W/ HALT COVER |
| **DATE:** 7/17/2019 | **REVISION LEVEL:** A | | DIMENSIONS ARE IN INCHES<br>TOLERANCES:<br>FRACTIONAL: ± 1/8"<br>ANGULAR: ± 2° |
| **WEIGHT:** 5681 LBS. | **MATERIAL:** NOTED | | CONTACT INFORMATION:<br>EMAIL: INFO@CONCASTINC.COM<br>PHONE: (507) 732-4095<br>FAX: (507) 732-4094 |
| | | | SHEET 1 OF 1 |
| | | | **PART NUMBER:** PB9-44-68-72-HALT |