REV B - MKM - 5/13/18 - UPDATED DIMENSIONS & NOTES

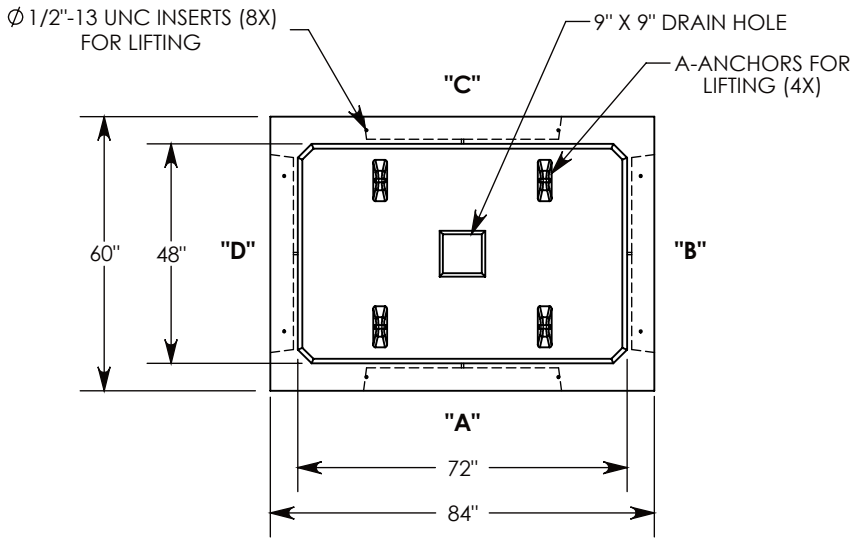

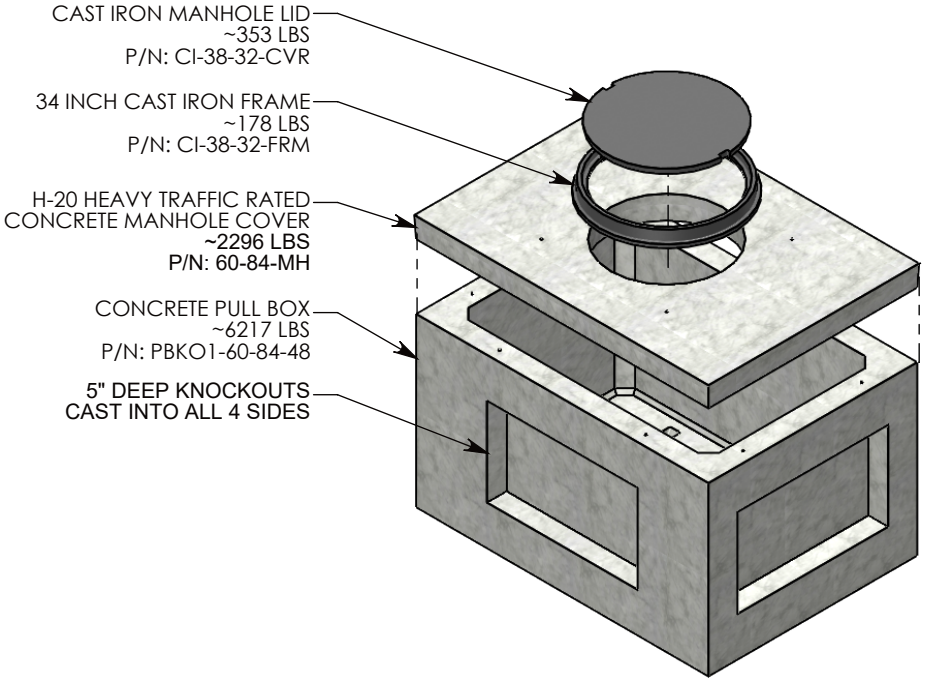

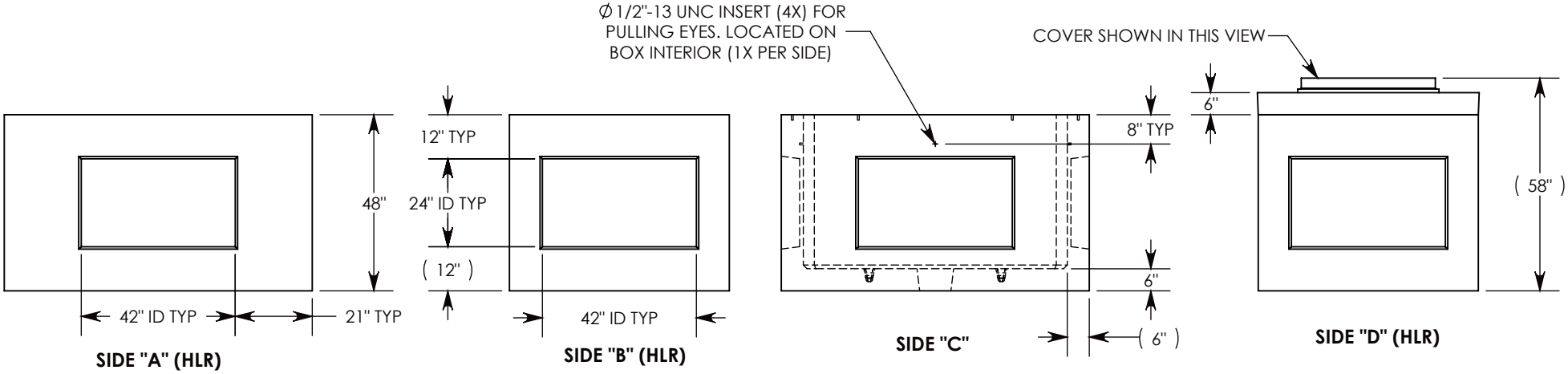

DRAWN BY: ROBIN FLINT		CONCAST 1010 NORTH STAR DRIVE P.O. BOX 69 ZUMBROTA, MN 55992-0069	**DESCRIPTION:** PULL BOX W/MANHOLE COVER
DATE: 8/13/2018	**REVISION LEVEL:** B		DIMENSIONS ARE IN INCHES TOLERANCES: FRACTIONAL: ± 1/8" ANGULAR: ± 2°
WEIGHT: 9044 LBS. W/COVER	**MATERIAL:** NOTED		CONTACT INFORMATION: EMAIL: INFO@CONCASTINC.COM PHONE: (507) 732-4095 FAX: (507) 732-4094
			SHEET 1 OF 1
			PART NUMBER: PBKO1-60-84-48-MH