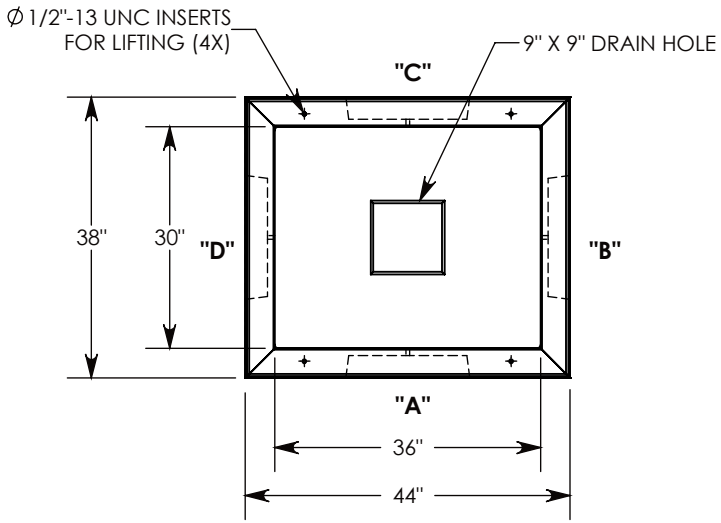

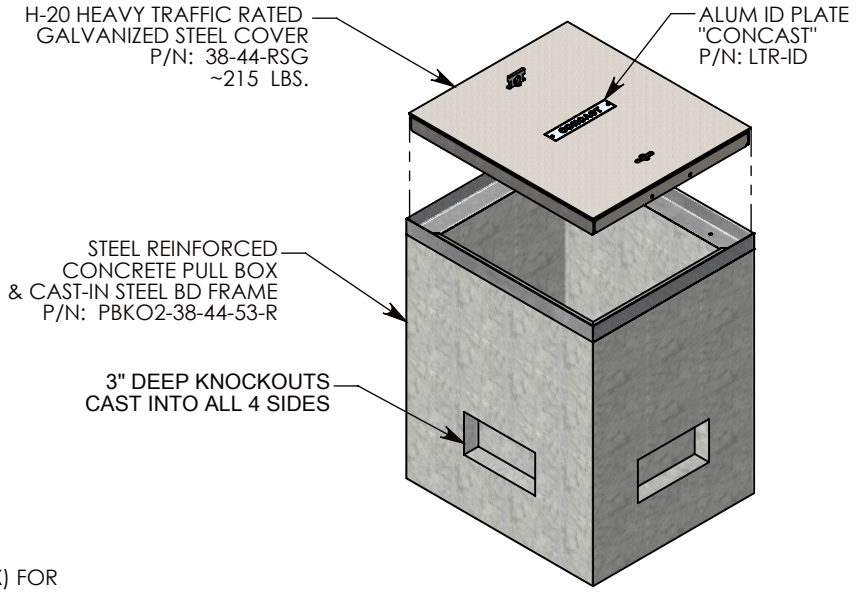

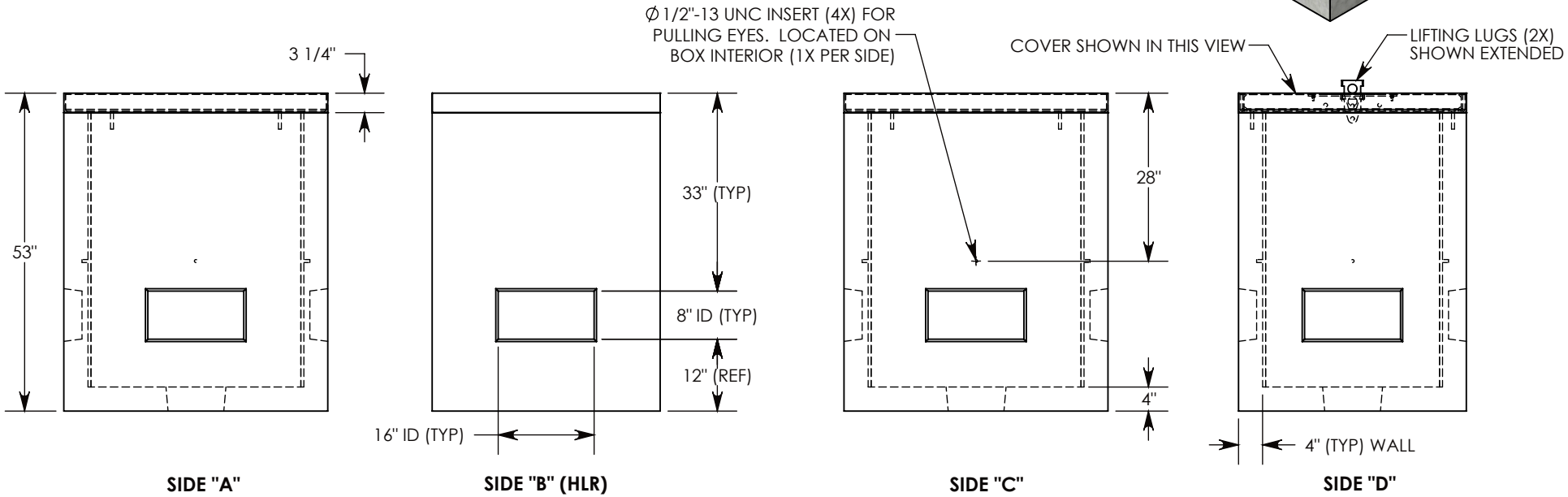

NOTE 1: FOR A BOLT-DOWN COVER OPTION, USE PBKO2-38-44-53-RSGBD OR PBKO2-38-44-53-RSGBDSL

H-20 RATED - 32,000 LB. PER AXLE LOAD.

DRAWN BY: ROBIN FLINT		CONCAST 1010 NORTH STAR DRIVE P.O. BOX 69 ZUMBROTA, MN 55992-0069	**DESCRIPTION:** CONCRETE PULL BOX W/RSG COVER
DATE: 12/30/2015	**REVISION LEVEL:** 0		DIMENSIONS ARE IN INCHES TOLERANCES: FRACTIONAL: ± 1/8" ANGULAR: ± 2°
WEIGHT: 2892 LBS. W/COVER	**MATERIAL:** NOTED		CONTACT INFORMATION: EMAIL: INFO@CONCASTINC.COM PHONE: (507) 732-4095 FAX: (507) 732-4094
			SHEET 1 OF 1
			PART NUMBER: PBKO2-38-44-53-RSG