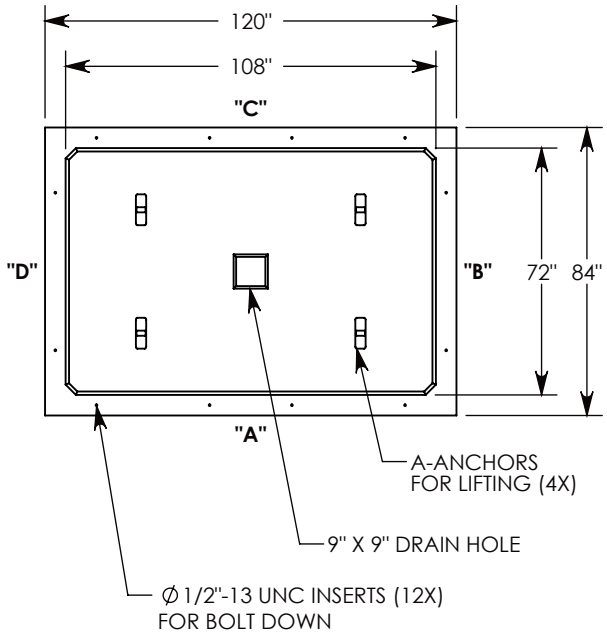

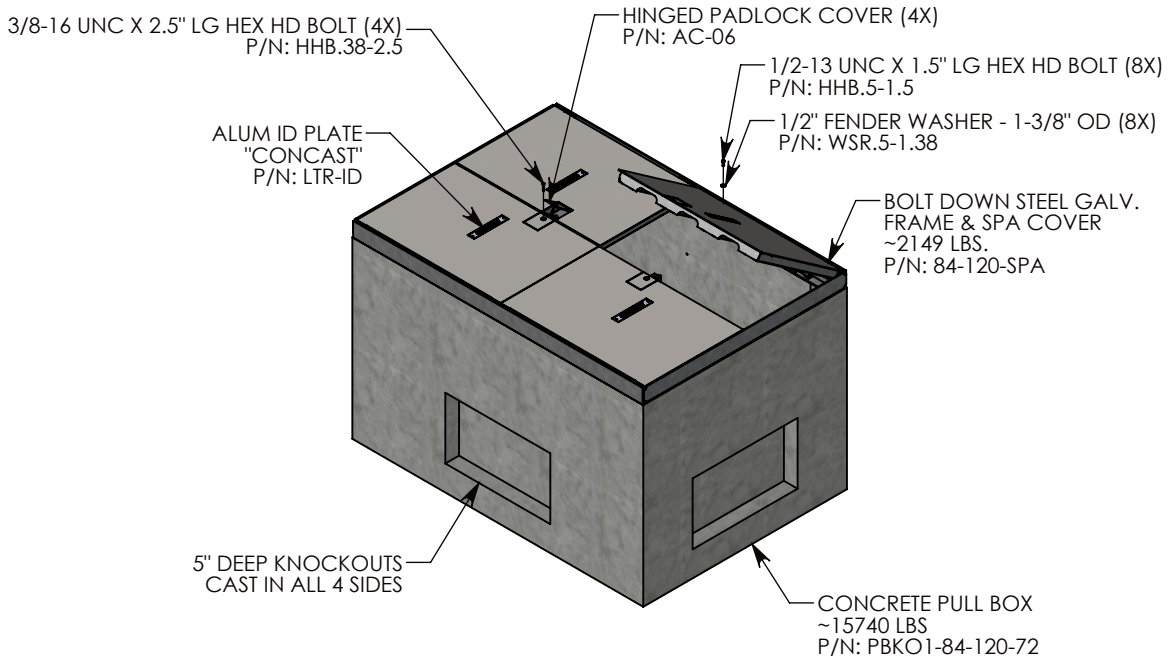

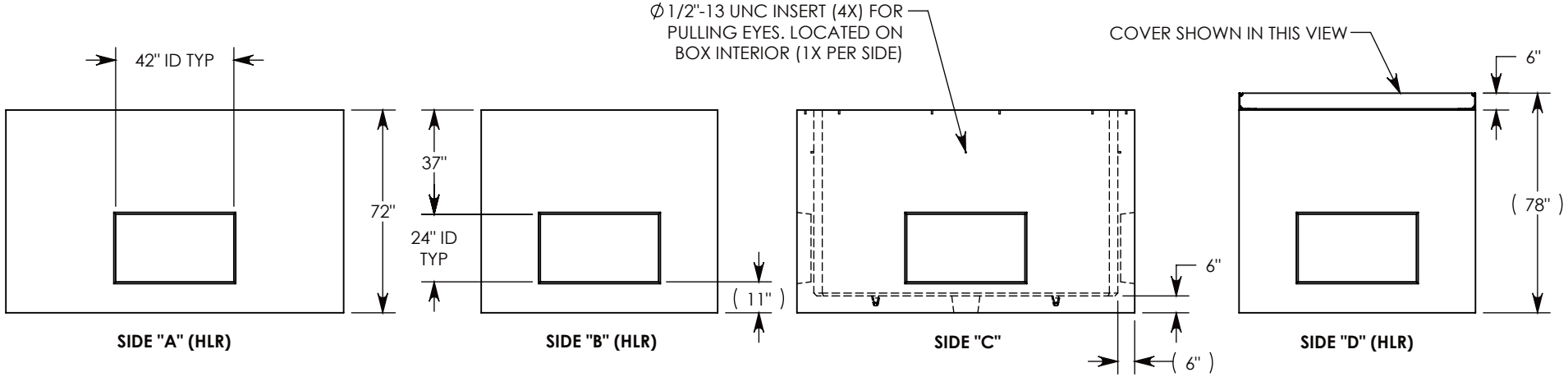

NOTE 1: FOR ADDED SECURITY, PENTA HEAD (P/N: PTA.38-2.5) OR SURELOCK BOLTS (P/N: SL.38-2.5) CAN BE ADDED

AASHTO H-20 RATED – 32,000 LB. SINGLE AXLE LOAD

DRAWN BY: **JESSE GUTTING**		
CREATED DATE: **7/26/2019**	REVISION LEVEL: **0**	
SAVED DATE: **4/13/2022**	SAVED BY: **jgutting**	
WEIGHT: **17890 LBS.**	MATERIAL: **NOTED**	

CONCAST
1010 NORTH STAR DRIVE
P.O. BOX 69
ZUMBROTA, MN 55992-0069

DESCRIPTION:
CONCRETE PULL BOX W/ SPA COVERS

DIMENSIONS ARE IN INCHES
TOLERANCES:
FRACTIONAL: ± 1/8"
ANGULAR: ± 2°

CONTACT INFORMATION:
EMAIL: INFO@CONCASTINC.COM
PHONE: (507) 732-4095
FAX: (507) 732-4094

SHEET 1 OF 1

PART NUMBER:
PBKO1-84-120-72-SPA